YANMAR

# PARTS CATALOG

0CD50-M04320EN

Last update May., 2021

# PREFACE

This parts catalog is the 1st edition of 3TNM72-AFF for DONGFENG NONGJI.

Published : November, 2018

# Contents

0CD50-M04320


| Fig. No. | Fig. Name |
|---|---|
| ENGINE | |
| 1. | CYLINDER BLOCK |
| 2. | GEAR HOUSING |
| 3. | MOUNTING FLANGE & OIL SUMP |
| 4. | CYLINDER HEAD & BONNET |
| 5. | EXHAUST MANIFOLD |
| 6. | CAMSHAFT & DRIVING GEAR |
| 7. | CRANKSHAFT & PISTON |
| 8. | LUB. OIL SYSTEM |
| 9. | COOLING WATER SYSTEM |
| 10. | FUEL INJECTION PUMP |
| 11. | GOVERNOR |
| 12. | FUEL INJECTION VALVE |
| 13. | FUEL PIPE |
| 14. | STARTER MOTOR |
| 15. | GENERATOR |
| 16. | ACCESSORY |

# Fig.1. CYLINDER BLOCK

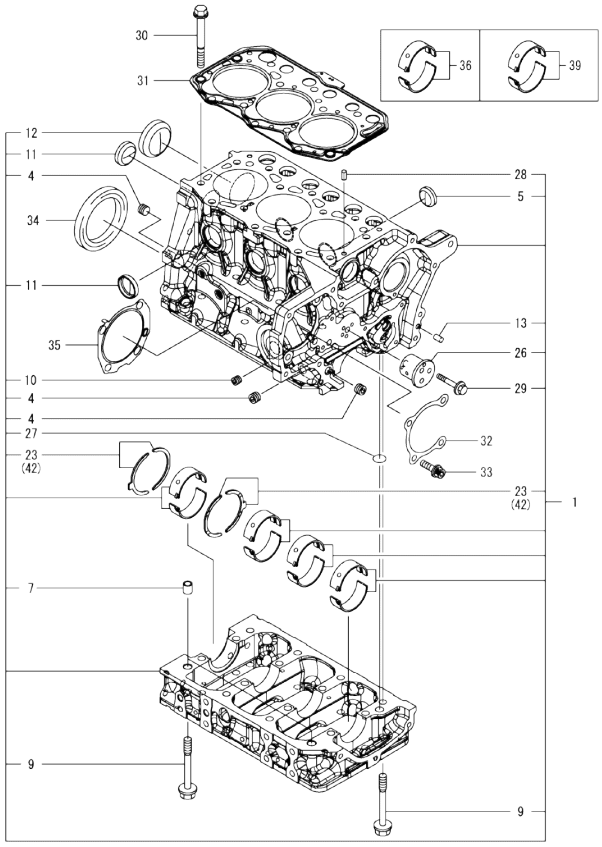


Remarks
(1)Spare parts.
(2)Under-sized(U.S.=0.25) parts.
(3)Over-sized(O.S.=0.25) parts.



(A)=3TNM72-AFF
(B)=
(C)=
(D)=
(E)=
(F)=

| No. | Lev. | Parts No. | Description | Q'ty (A) | (B) | (C) | (D) | (E) | (F) | I | R |
|---|---|---|---|---|---|---|---|---|---|---|---|
| 1 | 1 | 119027-01560 | BLOCK ASSY, CYLINDER | 1 | | | | | | | |
| 4 | 2 | 124060-01050 | PLUG, PT1/8 | 3 | | | | | | | |
| 5 | 2 | 119125-01970 | PLUG, 25 | 3 | | | | | | | |
| 7 | 2 | 119125-01960 | PIPE, KNOCK L=12 | 2 | | | | | | | |
| 9 | 2 | 119125-02061 | BOLT, METAL CAP | 16 | | | | | | | |
| 10 | 2 | 23876-005000 | PLUG, R005 | 1 | | | | | | | |
| 11 | 2 | 27241-300000 | PLUG 30 | 4 | | | | | | | |
| 12 | 2 | 27241-450000 | PLUG, 45 | 1 | | | | | | | |
| 13 | 2 | 119620-01620 | PIN, PARALLEL M6X10 | 2 | | | | | | | |
| 23 | 2 | 119125-02930 | METAL ASSY, THRUST | 2 | | | | | | | |
| 26 | 2 | 119125-25050 | SHAFT, IDLE GEAR | 1 | | | | | | | |
| 27 | 2 | 129900-32040 | O-RING, P14 | 1 | | | | | | | |
| 28 | 2 | 22351-060012 | PIN, SPRING 6.0X12 | 2 | | | | | | | |
| 29 | 2 | 26106-060402 | BOLT, M6X 40 PLATED | 3 | | | | | | | |
| 30 | 1 | 119515-01200 | BOLT, CYLINDER HEAD | 14 | | | | | | | |
| 31 | 1 | 119025-01332 | GASKET, HEAD | 1 | | | | | | | |
| 32 | 1 | 119125-01790 | GASKET, PUMP | 1 | | | | | | | |
| 33 | 1 | 119125-01800 | BOLT, FLANGE M8X25 | 4 | | | | | | | |
| 34 | 1 | 119734-02220 | SEAL, OIL WHEEL SIDE | 1 | | | | | | | |
| 35 | 1 | 119125-51800 | GASKET, FUEL PUMP | 1 | | | | | | | |
| 36 | 1 | 119125-02900 | METAL ASSY, MAIN | 4 | | | | | | | 1 |
| 39 | 1 | 119125-02910 | METAL ASSY, MAIN .25 | 4 | | | | | | | 2 |
| 42 | 1 | 119125-02940 | METAL ASSY, 0.25 OS | 2 | | | | | | | 3 |

N:Old ←Yes/No→ New. Q:Old ←No/Yes→ New. R:Old ←Yes/Yes→ New. S:Old ←No/No→ New. W:Add. Z:Discontinued. F:Interchangeable by set. K:Q'ty Change

Copyright (C) 2018 YANMAR GLOBAL CS CO., LTD. All RightsReserved.

# Fig.2. GEAR HOUSING



(A)=3TNM72-AFF
(B)=
(C)=
(D)=
(E)=
(F)=

| No. | Lev. | Parts No. | Description | Q'ty (A) | (B) | (C) | (D) | (E) | (F) | I | R |
|---|---|---|---|---|---|---|---|---|---|---|---|
| 1 | 1 | 119025-01500 | CASE, GEAR | 1 | | | | | | | |
| 2 | 1 | 119125-01750 | COVER, PUMP | 1 | | | | | | | |
| 3 | 1 | 119717-01800 | SEAL, OIL | 1 | | | | | | | |
| 4 | 1 | 26106-080352 | BOLT, M8X 35 PLATED | 8 | | | | | | | |
| 5 | 1 | 26106-080452 | BOLT, M8X 45 PLATED | 5 | | | | | | | |
| 6 | 1 | 106760-01770 | CAP, OIL SUPPLY | 1 | | | | | | | |
| 7 | 1 | 24311-000180 | O-RING, 1AP18.0 | 1 | | | | | | | |

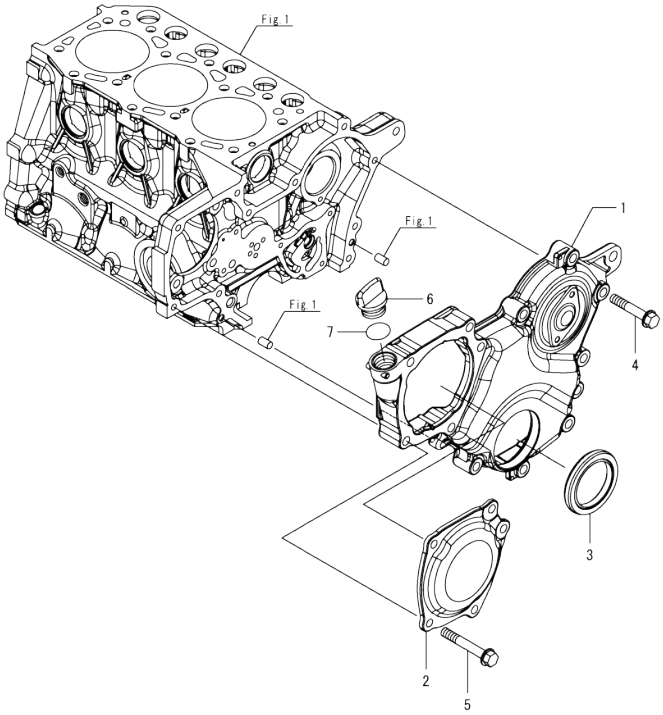


N:Old $\frac{\text{Yes}}{\text{No}}$ New. Q:Old $\frac{\text{No}}{\text{Yes}}$ New. R:Old $\frac{\text{Yes}}{\text{Yes}}$ New. S:Old $\frac{\text{No}}{\text{No}}$ New. W:Add. Z:Discontinued. F:Interchangeable by set. K:Q'ty Change

Copyright (C) 2018 YANMAR GLOBAL CS CO., LTD. All RightsReserved.

# Fig.3. MOUNTING FLANGE & OIL SUMP



(A)=3TNM72-AFF
(B)=
(C)=
(D)=
(E)=
(F)=

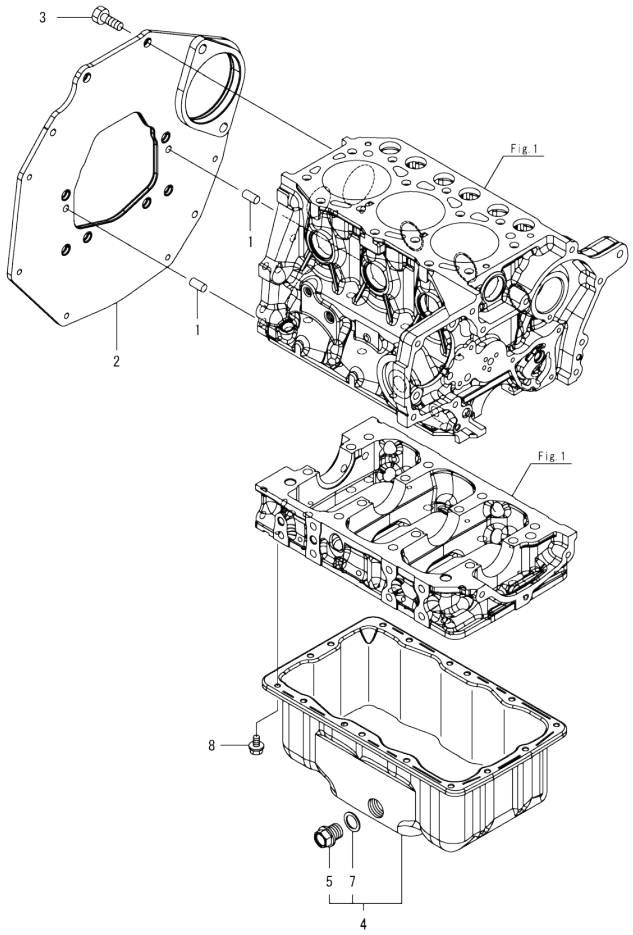


| No. | Lev. | Parts No. | Description | Q'ty (A) | (B) | (C) | (D) | (E) | (F) | I | R |
|---|---|---|---|---|---|---|---|---|---|---|---|
| 1 | 1 | 129100-01580 | PIN, PARALLEL 8X16 | 2 | | | | | | | |
| 2 | 1 | 119D00-01660 | FLANGE, MOUNTING | 1 | | | | | | | |
| 3 | 1 | 26206-100202 | BOLT, M10X 20 PLATED | 8 | | | | | | | |
| 4 | 1 | 119025-01770 | OIL PAN ASSY | 1 | | | | | | | |
| 5 | 2 | 105425-01690 | PLUG, DRAIN M16 | 1 | | | | | | | |
| 7 | 2 | 22190-160002 | WASHER, SEAL 16 | 1 | | | | | | | |
| 8 | 1 | 119125-01780 | BOLT, TORX M6X10 | 16 | | | | | | | |

N:Old ◄Yes/No► New. Q:Old ◄No/Yes► New. R:Old ◄Yes/Yes► New. S:Old ◄No/No► New. W:Add. Z:Discontinued. F:Interchangeable by set. K:Q'ty Change

Copyright (C) 2018 YANMAR GLOBAL CS CO., LTD. All RightsReserved.

# Fig.4. CYLINDER HEAD & BONNET



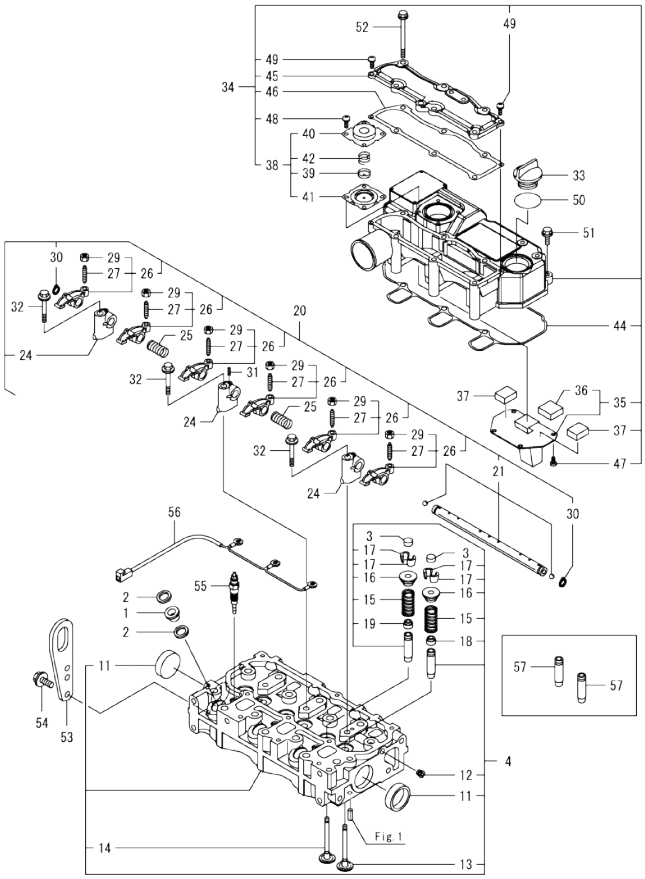


(A)=3TNM72-AFF
(B)=
(C)=
(D)=
(E)=
(F)=

| No. | Lev. | Parts No. | Description | Q'ty (A) | (B) | (C) | (D) | (E) | (F) | I | R |
|---|---|---|---|---|---|---|---|---|---|---|---|
| 1 | 1 | 129901-11450 | PROTECTOR, NOZZLE | 3 | | | | | | | |
| 2 | 1 | 119600-11460 | GASKET, NOZZLE | 6 | | | | | | | |
| 3 | 1 | 105010-11490 | CAP, VALVE | 6 | | | | | | | |
| 4 | 1 | 119517-11740 | HEAD ASSY, CYLINDER | 1 | | | | | | | |
| 11 | 2 | 119285-11990 | PLUG, 35 | 2 | | | | | | | |
| 12 | 2 | 23876-005000 | PLUG, R005 | 1 | | | | | | | |
| 13 | 2 | 119515-11101 | VALVE, INTAKE | 3 | | | | | | | |
| 14 | 2 | 119515-11110 | VALVE, EXHAUST | 3 | | | | | | | |
| 15 | 2 | 119717-11131 | SPRING, VALVE | 6 | | | | | | | |
| 16 | 2 | 129508-11180 | RETAINER, SPRING | 6 | | | | | | | |
| 17 | 2 | 119717-11190 | COTTER, VALVE | 12 | | | | | | | |
| 18 | 2 | 119717-11340 | SEAL, VALVE STEM | 3 | | | | | | | |
| 19 | 2 | 119717-11350 | SEAL, VALVE STEM | 3 | | | | | | | |
| 20 | 1 | 119515-11200 | SUPPORT ASSY, ROCKER | 1 | | | | | | | |
| 21 | 2 | 119515-11240 | SHAFT ASSY, ARM | 1 | | | | | | | |
| 24 | 2 | 119717-11260 | SUPPORT, ROCKER ARM | 3 | | | | | | | |
| 25 | 2 | 119515-11280 | SPRING, SHAFT | 2 | | | | | | | |
| 26 | 2 | 119717-11650 | ARM ASSY, ROCKER INT | 6 | | | | | | | |
| 27 | 3 | 129150-11230 | SCREW, VALVE ADJUST | 6 | | | | | | | |
| 29 | 3 | 129150-11750 | NUT, M8XP1.0 | 6 | | | | | | | |
| 30 | 2 | 22242-000120 | RING, 12 | 2 | | | | | | | |
| 31 | 2 | 26979-050162 | SCREW, M5X16 | 1 | | | | | | | |
| 32 | 1 | 26106-080402 | BOLT, M8X 40 PLATED | 3 | | | | | | | |
| 33 | 1 | 124160-01751 | CAP, FILLER | 1 | | | | | | | |
| 34 | 1 | 119515-11380 | BONNET ASSY, HEAD | 1 | | | | | | | |
| 35 | 2 | 119717-03031 | PLATE, BAFFLE | 1 | | | | | | | |
| 36 | 3 | 119717-03070 | BAFFLE, BREATHER | 1 | | | | | | | |
| 37 | 2 | 119717-03070 | BAFFLE, BREATHER | 2 | | | | | | | |
| 38 | 2 | 119802-03100 | DIAPHRAGM ASSY | 1 | | | | | | | |
| 39 | 3 | 119802-03110 | PLATE, DIAPHRAGM | 1 | | | | | | | |
| 40 | 3 | 119802-03121 | COVER, DIAPHRAGM | 1 | | | | | | | |
| 41 | 3 | 119802-03131 | DIAPHRAGM, BREATHER | 1 | | | | | | | |
| 42 | 3 | 119802-03141 | SPRING, DIAPHRAGM | 1 | | | | | | | |
| 44 | 2 | 119515-11310 | GASKET, BONNET | 1 | | | | | | | |
| 45 | 2 | 119515-11320 | COVER, BONNET | 1 | | | | | | | |
| 46 | 2 | 119515-11330 | GASKET, BONNET COVER | 1 | | | | | | | |
| 47 | 2 | 22857-500100 | SCREW, 5X10 | 4 | | | | | | | |
| 48 | 2 | 22857-500100 | SCREW, 5X10 | 4 | | | | | | | |
| 49 | 2 | 22857-500160 | SCREW, 5X16 | 2 | | | | | | | |
| 50 | 1 | 24311-000320 | O-RING, 1AP32.0 | 1 | | | | | | | |
| 51 | 1 | 26106-060202 | BOLT, M6X 20 PLATED | 3 | | | | | | | |
| 52 | 1 | 26106-060752 | BOLT, M6X 75 PLATED | 6 | | | | | | | |
| 53 | 1 | 119226-07900 | LIFTER, ENGINE | 1 | | | | | | | |
| 54 | 1 | 26106-080162 | BOLT, M8X 16 PLATED | 2 | | | | | | | |
| 55 | 1 | 119125-77800 | PLUG, GLOW | 3 | | | | | | | |
| 56 | 1 | 119125-77820 | CONNECTOR, GLOW PLUG | 1 | | | | | | | |
| 57 | 1 | 119515-11800 | GUIDE, VALVE | 6 | | | | | | | 1 |

Remarks
(1)Spare parts.

N:Old $\xleftrightarrow[\text{No}]{\text{Yes}}$ New. Q:Old $\xleftrightarrow[\text{Yes}]{\text{No}}$ New. R:Old $\xleftrightarrow[\text{Yes}]{\text{Yes}}$ New. S:Old $\xleftrightarrow[\text{No}]{\text{No}}$ New. W:Add. Z:Discontinued. F:Interchangeable by set. K:Q'ty Change

Copyright (C) 2018 YANMAR GLOBAL CS CO., LTD. All RightsReserved.

# Fig.5. EXHAUST MANIFOLD



(A)=3TNM72-AFF
(B)=
(C)=
(D)=
(E)=
(F)=

| No. | Lev. | Parts No. | Description | Q'ty (A) | (B) | (C) | (D) | (E) | (F) | I | R |
|---|---|---|---|---|---|---|---|---|---|---|---|
| 1 | 1 | 119718-13100 | MANIFOLD, EXHAUST | 1 | | | | | | | |
| 2 | 1 | 119717-13110 | GASKET, MANIFOLD | 1 | | | | | | | |
| 3 | 1 | 119717-13600 | STUD, M8X50 | 2 | | | | | | | |
| 4 | 1 | 129E00-13610 | BOLT, M8X50 10.9 | 4 | | | | | | | |
| 5 | 1 | 119131-18320 | STUD, M8X22 | 4 | | | | | | | |
| 6 | 1 | 26306-080002 | NUT, M8 | 2 | | | | | | | |

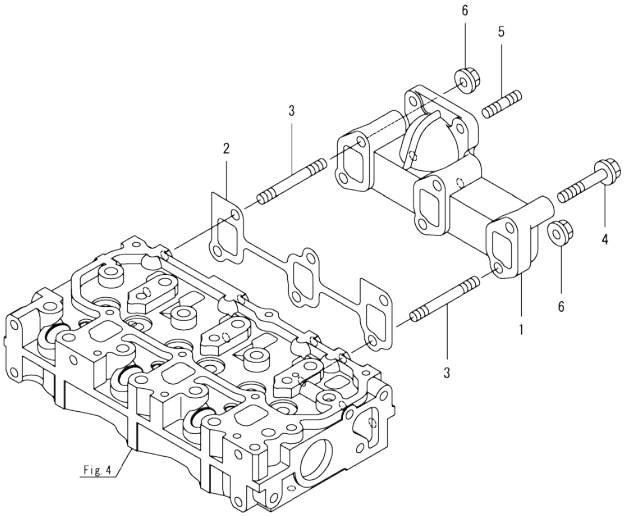


N:Old ◄Yes/No► New. Q:Old ◄No/Yes► New. R:Old ◄Yes/Yes► New. S:Old ◄No/No► New. W:Add. Z:Discontinued. F:Interchangeable by set. K:Q'ty Change

Copyright (C) 2018 YANMAR GLOBAL CS CO., LTD. All RightsReserved.

# Fig.6. CAMSHAFT & DRIVING GEAR



(A)=3TNM72-AFF
(B)=
(C)=
(D)=
(E)=
(F)=

| No. | Lev. | Parts No. | Description | Q'ty (A) | (B) | (C) | (D) | (E) | (F) | I | R |
|---|---|---|---|---|---|---|---|---|---|---|---|
| 1 | 1 | 119620-14200 | TAPPET | 6 | | | | | | | |
| 2 | 1 | 119515-14400 | ROD, PUSH | 6 | | | | | | | |
| 3 | 1 | 119025-14580 | CAMSHAFT ASSY | 1 | | | | | | | |
| 4 | 2 | 119620-02450 | METAL, CAMSHAFT | 1 | | | | | | | |
| 8 | 1 | 26106-060122 | BOLT, M6X 12 PLATED | 2 | | | | | | | |
| 9 | 1 | 119025-25100 | GEAR ASSY, IDLE | 1 | | | | | | | |
| 12 | 1 | 129150-25301 | BOLT, INJECTION PUMP | 4 | | | | | | | |
| 13 | 1 | 119125-25930 | GEAR, PUMP | 1 | | | | | | | |
| 14 | 1 | 119125-25910 | BUSH, IDLE GEAR | 1 | | | | | | | 1 |
| 15 | 1 | 119717-51150 | FLANGE, CAMSHAFT | 1 | | | | | | | |

Remarks
(1)Spare parts.

N:Old $\frac{\text{Yes}}{\text{No}}$ New. Q:Old $\frac{\text{No}}{\text{Yes}}$ New. R:Old $\frac{\text{Yes}}{\text{Yes}}$ New. S:Old $\frac{\text{No}}{\text{No}}$ New. W:Add. Z:Discontinued. F:Interchangeable by set. K:Q'ty Change

Copyright (C) 2018 YANMAR GLOBAL CS CO., LTD. All RightsReserved.

# Fig.7. CRANKSHAFT & PISTON



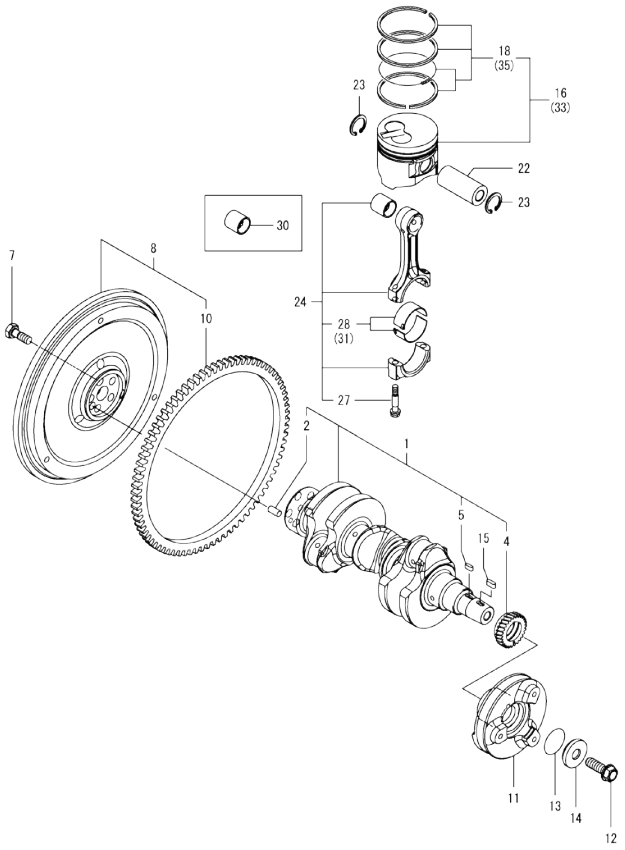


(A)=3TNM72-AFF
(B)=
(C)=
(D)=
(E)=
(F)=

| No. | Lev. | Parts No. | Description | Q'ty (A) | (B) | (C) | (D) | (E) | (F) | I | R |
|---|---|---|---|---|---|---|---|---|---|---|---|
| 1 | 1 | 119025-21700 | CRANKSHAFT ASSY | 1 | | | | | | | |
| 2 | 2 | 129100-01580 | PIN, PARALLEL 8X16 | 1 | | | | | | | |
| 4 | 2 | 119125-21200 | GEAR, CRANKSHAFT | 1 | | | | | | | |
| 5 | 2 | 22512-040120 | KEY, 4X 12 | 1 | | | | | | | |
| 7 | 1 | 119620-21500 | BOLT, FLYWHEEL | 5 | | | | | | | |
| 8 | 1 | 119127-21550 | FLYWHEEL ASSY | 1 | | | | | | | |
| 10 | 2 | 124060-21600 | GEAR, RING Z=105 | 1 | | | | | | | |
| 11 | 1 | 119125-21660 | V-PULLEY, CRANKSHAFT | 1 | | | | | | | |
| 12 | 1 | 119621-21681 | BOLT, FLANGE 12X1.25 | 1 | | | | | | | |
| 13 | 1 | 119C10-21931 | PACKING, WASHER | 1 | | | | | | | |
| 14 | 1 | 119C10-21940 | WASHER, V-PULLEY | 1 | | | | | | | |
| 15 | 1 | 22512-050120 | KEY, 5X 12 | 1 | | | | | | | |
| 16 | 1 | 119517-22090 | PISTON ASSY | 3 | | | | | | | |
| 18 | 2 | 119517-22500 | RING SET, PISTON | 3 | | | | | | | |
| 22 | 1 | 119515-22300 | PIN, PISTON | 3 | | | | | | | |
| 23 | 1 | 22252-000220 | RING, 22 | 6 | | | | | | | |
| 24 | 1 | 119515-23001 | ROD ASSY, CONNECTING | 3 | | | | | | | |
| 27 | 2 | 119717-23200 | BOLT, CONNECTING ROD | 6 | | | | | | | |
| 28 | 2 | 119515-23601 | METAL ASSY,CRANK PIN | 3 | | | | | | | |
| 30 | 1 | 119717-23911 | BUSH, PISTON PIN | 3 | | | | | | | 1 |
| 31 | 1 | 119515-23611 | METAL ASSY, PIN .25 | 3 | | | | | | | 2 |
| 33 | 1 | 119025-22900 | PISTON ASSY | 3 | | | | | | | 3 |
| 35 | 2 | 119609-22950 | RING SET, PISTON .25 | 3 | | | | | | | 3 |

Remarks
(1)Spare parts.
(2)Under-sized(U.S.=0.25) parts.
(3)Over-sized(O.S.=0.25) parts.

N:Old ←Yes/No→ New. Q:Old ←No/Yes→ New. R:Old ←Yes/Yes→ New. S:Old ←No/No→ New. W:Add. Z:Discontinued. F:Interchangeable by set. K:Q'ty Change

Copyright (C) 2018 YANMAR GLOBAL CS CO., LTD. All RightsReserved.

# Fig.8. LUB. OIL SYSTEM

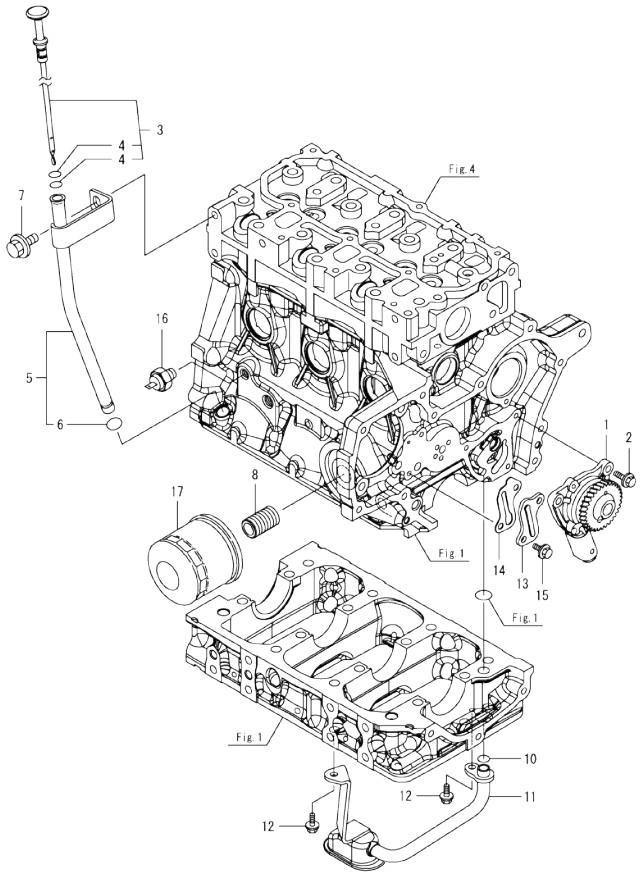


Remarks
(1)Spare parts.



(A)=3TNM72-AFF
(B)=
(C)=
(D)=
(E)=
(F)=

| No. | Lev. | Parts No. | Description | Q'ty (A) | (B) | (C) | (D) | (E) | (F) | I | R |
|---|---|---|---|---|---|---|---|---|---|---|---|
| 1 | 1 | 119125-32000 | PUMP ASSY, OIL | 1 | | | | | | | |
| 2 | 1 | 26106-060142 | BOLT, M6X 14 PLATED | 3 | | | | | | | |
| 3 | 1 | 119027-34820 | DIPSTICK, OIL | 1 | | | | | | | |
| 4 | 2 | 119125-34900 | O-RING | 2 | | | | | | | |
| 5 | 1 | 119027-34850 | GUIDE, DIPSTICK | 1 | | | | | | | |
| 6 | 2 | 24316-000090 | O-RING, 4DP9.0 | 1 | | | | | | | |
| 7 | 1 | 26106-080122 | BOLT, M8X 12 PLATED | 1 | | | | | | | |
| 8 | 1 | 119717-35140 | STUD | 1 | | | | | | | |
| 10 | 1 | 119209-35030 | O-RING, P11 | 1 | | | | | | | |
| 11 | 1 | 119025-35080 | PIPE ASSY, OIL INLET | 1 | | | | | | | |
| 12 | 1 | 26106-060102 | BOLT, M6X 10 PLATED | 2 | | | | | | | |
| 13 | 1 | 119125-39200 | COVER, OIL | 1 | | | | | | | |
| 14 | 1 | 119125-39220 | GASKET, OIL PIPE | 1 | | | | | | | |
| 15 | 1 | 26106-060122 | BOLT, M6X 12 PLATED | 2 | | | | | | | |
| 16 | 1 | 114250-39450 | SWITCH, HYDRAULIC | 1 | | | | | | | |
| 17 | 1 | 119305-35151 | FILTER ASSY, D68XL65 | 1 | | | | | | | 1 |

N:Old ←Yes/No→ New. Q:Old ←No/Yes→ New. R:Old ←Yes/Yes→ New. S:Old ←No/No→ New. W:Add. Z:Discontinued. F:Interchangeable by set. K:Q'ty Change

Copyright (C) 2018 YANMAR GLOBAL CS CO., LTD. All RightsReserved.

# Fig.9. COOLING WATER SYSTEM



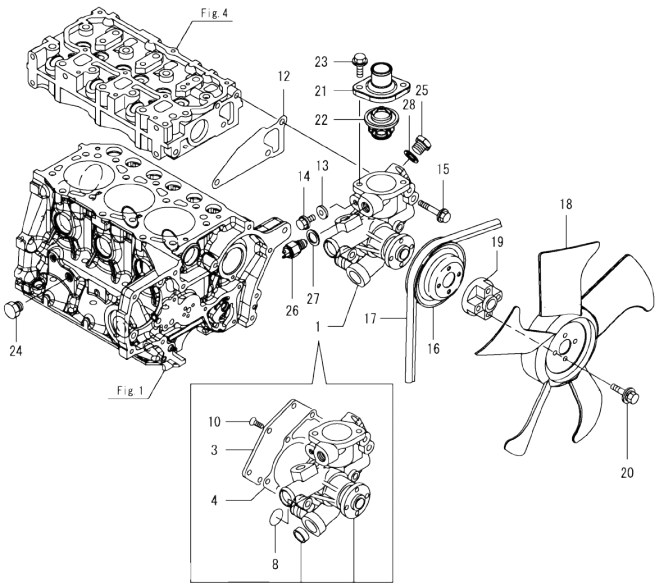


(A)=3TNM72-AFF
(B)=
(C)=
(D)=
(E)=
(F)=

| No. | Lev. | Parts No. | Description | Q'ty (A) | (B) | (C) | (D) | (E) | (F) | I | R |
|---|---|---|---|---|---|---|---|---|---|---|---|
| 1 | 1 | 119025-42000 | PUMP ASSY, WATER | 1 | | | | | | | |
| 3 | 2 | 119025-42020 | COVER, WATER PUMP | 1 | | | | | | | |
| 4 | 2 | 119025-42030 | GASKET, WATER PUMP | 1 | | | | | | | |
| 8 | 2 | 119685-42281 | O-RING | 1 | | | | | | | |
| 10 | 2 | 26577-060122 | SCREW, M6X12 | 5 | | | | | | | |
| 12 | 1 | 119515-42020 | GASKET, WATER PUMP | 1 | | | | | | | |
| 13 | 1 | 23414-080000 | GASKET, 8X1.0 | 1 | | | | | | | |
| 14 | 1 | 26106-080122 | BOLT, M8X 12 PLATED | 1 | | | | | | | |
| 15 | 1 | 26106-080452 | BOLT, M8X 45 PLATED | 3 | | | | | | | |
| 16 | 1 | 119740-42350 | V-PULLEY, PUMP D=90 | 1 | | | | | | | |
| 17 | 1 | 119127-42310 | V-BELT, A34.5 | 1 | | | | | | | |
| 18 | 1 | 119258-44740 | FAN, COOLING D=300 | 1 | | | | | | | |
| 19 | 1 | 121267-44760 | SPACER, FAN 18MM | 1 | | | | | | | |
| 20 | 1 | 26106-060302 | BOLT, M6X 30 PLATED | 4 | | | | | | | |
| 21 | 1 | 129350-49530 | COVER, THERMOSTAT | 1 | | | | | | | |
| 22 | 1 | 119717-49800 | THERMOSTAT, 71C | 1 | | | | | | | |
| 23 | 1 | 26106-080202 | BOLT, M8X 20 PLATED | 2 | | | | | | | |
| 24 | 1 | 171056-49120 | PLUG, DRAIN R1/4 | 1 | | | | | | | |
| 25 | 1 | 121450-42450 | PLUG, M16 | 1 | | | | | | | |
| 26 | 1 | 121250-44901 | SWITCH, TEMPERATURE | 1 | | | | | | | |
| 27 | 1 | 124465-44950 | GASKET, 16 | 1 | | | | | | | |
| 28 | 1 | 124465-44950 | GASKET, 16 | 1 | | | | | | | |

N:Old ←Yes/No→ New. Q:Old ←No/Yes→ New. R:Old ←Yes/Yes→ New. S:Old ←No/No→ New. W:Add. Z:Discontinued. F:Interchangeable by set. K:Q'ty Change

Copyright (C) 2018 YANMAR GLOBAL CS CO., LTD. All RightsReserved.

# Fig.10. FUEL INJECTION PUMP



(A)=3TNM72-AFF
(B)=
(C)=
(D)=
(E)=
(F)=

| No. | Lev. | Parts No. | Description | Q'ty (A) | (B) | (C) | (D) | (E) | (F) | I | R |
|---|---|---|---|---|---|---|---|---|---|---|---|
| 1 | 1 | 719027-51380 | FIE ASSY | 1 | | | | | | | 1 |
| 5 | 2 | 129155-51020 | STUD | 2 | | | | | | | |
| 8 | 2 | 122710-51090 | KEY, FEATHER | 1 | | | | | | | |
| 18 | 2 | 129155-51280 | O-RING, S6 | 1 | | | | | | | |
| 25 | 2 | 129155-51400 | PROTECTOR | 1 | | | | | | | |
| 26 | 2 | 158600-51410 | PLUG, DEFLIFTER M12 | 1 | | | | | | | |
| 27 | 2 | 119717-51420 | O-RING | 1 | | | | | | | |
| 28 | 2 | 158600-51420 | PLUG, DEFLIFTER M16 | 1 | | | | | | | |
| 45 | 2 | 158600-51570 | PLUG, RACK | 1 | | | | | | | |
| 46 | 2 | 129155-51580 | O-RING | 1 | | | | | | | |
| 82 | 2 | 119125-51700 | COVER, PUMP BOTTOM | 1 | | | | | | | |
| 83 | 2 | 119717-51711 | GASKET, PUMP | 1 | | | | | | | |
| 84 | 2 | 119717-51750 | COVER, BODY SIDE | 1 | | | | | | | |
| 85 | 2 | 119717-51761 | GASKET, PUMP COVER | 1 | | | | | | | |
| 86 | 2 | 158600-51790 | STOPPER, RACK | 1 | | | | | | | |
| 88 | 2 | 22190-160002 | WASHER, SEAL 16 | 1 | | | | | | | |
| 89 | 2 | 22217-120000 | WASHER, SPRING 12 | 1 | | | | | | | |
| 90 | 2 | 22351-050010 | PIN, SPRING 5.0X10 | 2 | | | | | | | |
| 94 | 2 | 26022-050122 | SCREW, M5X12 | 8 | | | | | | | |
| 96 | 2 | 26716-120002 | NUT, M12 | 1 | | | | | | | |
| 97 | 2 | 119717-51860 | NUT, M6 | 2 | | | | | | | |
| 100 | 2 | 129155-52051 | GASKET, PUMP COVER | 1 | | | | | | | |
| 101 | 2 | 129100-52200 | COVER, FEED PUMP | 1 | | | | | | | |

Remarks
(1)Governor(Fig.11) is incorporated in this Fuel Injection Pump(No.1).

N:Old ◄Yes/No► New. Q:Old ◄No/Yes► New, R:Old ◄Yes/Yes► New, S:Old ◄No/No► New. W:Add. Z:Discontinued. F:Interchangeable by set. K:Q'ty Change

Copyright (C) 2018 YANMAR GLOBAL CS CO., LTD. All RightsReserved.

# Fig.11. GOVERNOR

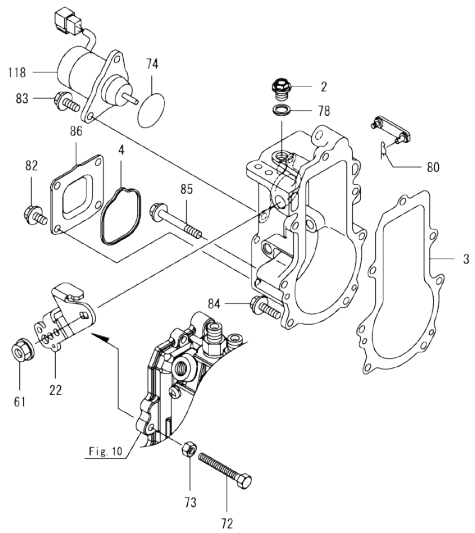




(A)=3TNM72-AFF
(B)=
(C)=
(D)=
(E)=
(F)=

| No. | Lev. | Parts No. | Description | Q'ty (A) | (B) | (C) | (D) | (E) | (F) | I | R |
|---|---|---|---|---|---|---|---|---|---|---|---|
| 2 | 2 | 119717-51930 | PLUG, M10 | 1 | | | | | | | |
| 3 | 2 | 119717-61050 | GASKET, CASE | 1 | | | | | | | |
| 4 | 2 | 119717-61070 | GASKET, COVER | 1 | | | | | | | |
| 22 | 2 | 119515-61440 | LEVER, CONTROL | 1 | | | | | | | |
| 61 | 2 | 26366-080002 | NUT, M8 | 1 | | | | | | | |
| 72 | 2 | 129155-61461 | BOLT,IDLE LIMIT | 1 | | | | | | | |
| 73 | 2 | 119740-61470 | NUT | 1 | | | | | | | |
| 74 | 2 | 158552-61900 | O-RING | 1 | | | | | | | |
| 78 | 2 | 22190-100002 | WASHER, SEAL 10 | 1 | | | | | | | |
| 80 | 2 | 22372-040000 | PIN, SNAP 4 | 1 | | | | | | | |
| 82 | 2 | 26106-060102 | BOLT, M6X 10 PLATED | 4 | | | | | | | |
| 83 | 2 | 26106-060142 | BOLT, M6X 14 PLATED | 2 | | | | | | | |
| 84 | 2 | 26106-060202 | BOLT, M6X 20 PLATED | 4 | | | | | | | |
| 85 | 2 | 26106-060452 | BOLT, M6X 45 PLATED | 3 | | | | | | | |
| 86 | 2 | 119717-61060 | COVER, GOVERNOR CASE | 1 | | | | | | | |
| 118 | 2 | 129630-77900 | SOLENOID, STOP | 1 | | | | | | | |

Remarks
* This figure(Governor) is incorporated in the Fuel Injection Pump(Fig.10).

N:Old ←Yes/No→ New. Q:Old ←No/Yes→ New. R:Old ←Yes/Yes→ New. S:Old ←No/No→ New. W:Add. Z:Discontinued. F:Interchangeable by set. K:Q'ty Change

Copyright (C) 2018 YANMAR GLOBAL CS CO., LTD. All RightsReserved.

# Fig.12. FUEL INJECTION VALVE

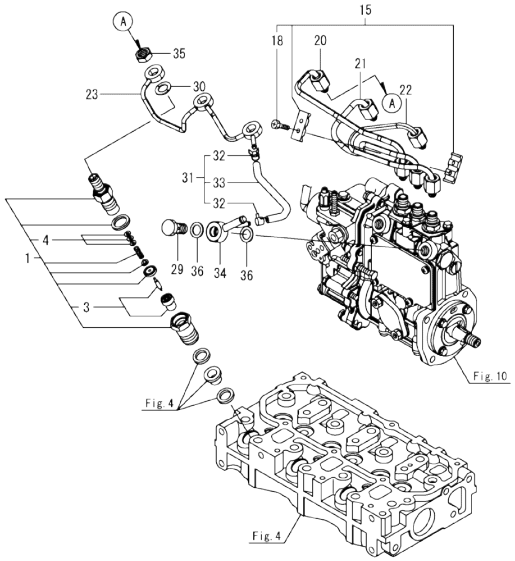




(A)=3TNM72-AFF
(B)=
(C)=
(D)=
(E)=
(F)=

| No. | Lev. | Parts No. | Description | Q'ty (A) | (B) | (C) | (D) | (E) | (F) | I | R |
|---|---|---|---|---|---|---|---|---|---|---|---|
| 1 | 1 | 119515-53001 | VALVE ASSY,INJECTION | 3 | | | | | | | |
| 3 | 2 | 119515-53010 | VALVE ASSY,INJECTION | 3 | | | | | | | |
| 4 | 2 | 129901-53800 | SHIM SET, ADJUSTING | 3 | | | | | | | 1 |
| 15 | 1 | 129150-59120 | RETAINER, PIPE | 1 | | | | | | | |
| 18 | 2 | 129150-59131 | BOLT, M4X14 | 2 | | | | | | | |
| 20 | 1 | 119025-59810 | PIPE, INJECTION NO.1 | 1 | | | | | | | |
| 21 | 1 | 119025-59820 | PIPE, INJECTION NO.2 | 1 | | | | | | | |
| 22 | 1 | 119025-59830 | PIPE, INJECTION NO.3 | 1 | | | | | | | |
| 23 | 1 | 119515-59540 | PIPE ASSY, RETURN | 1 | | | | | | | |
| 29 | 1 | 119125-59560 | BOLT, PIPE JOINT | 1 | | | | | | | |
| 30 | 1 | 129901-59560 | GASKET, FUEL RETURN | 3 | | | | | | | |
| 31 | 1 | 119125-59570 | HOSE ASSY, RETURN | 1 | | | | | | | |
| 32 | 2 | 124066-59100 | CLAMP, HOSE 8 | 2 | | | | | | | |
| 33 | 2 | 119000-59550 | HOSE, FUEL RETURN | 1 | | | | | | | |
| 34 | 1 | 119840-59570 | JOINT, OVERFLOW | 1 | | | | | | | |
| 35 | 1 | 119620-59700 | NUT, NOZZLE RETURN | 3 | | | | | | | |
| 36 | 1 | 22190-120002 | WASHER, SEAL 12 | 3 | | | | | | | |

Remarks
(1)Spare parts.

N:Old ◄Yes/No► New. Q:Old ◄No/Yes► New. R:Old ◄Yes/Yes► New. S:Old ◄No/No► New. W:Add. Z:Discontinued. F:Interchangeable by set. K:Q'ty Change

Copyright (C) 2018 YANMAR GLOBAL CS CO., LTD. All RightsReserved.

# Fig.13. FUEL PIPE

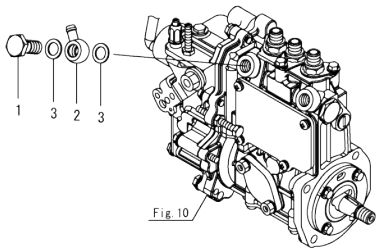




(A)=3TNM72-AFF
(B)=
(C)=
(D)=
(E)=
(F)=

| No. | Lev. | Parts No. | Description | Q'ty (A) | (B) | (C) | (D) | (E) | (F) | I | R |
|---|---|---|---|---|---|---|---|---|---|---|---|
| 1 | 1 | 103854-39140 | BOLT, PIPE JOINT | 1 | | | | | | | |
| 2 | 1 | 101304-59020 | JOINT, PIPE 12 | 1 | | | | | | | |
| 3 | 1 | 22190-120002 | WASHER, SEAL 12 | 2 | | | | | | | |

N:Old ◄Yes/No► New. Q:Old ◄No/Yes► New, R:Old ◄Yes/Yes► New. S:Old ◄No/No► New. W:Add. Z:Discontinued. F:Interchangeable by set. K:Q'ty Change

Copyright (C) 2018 YANMAR GLOBAL CS CO., LTD. All RightsReserved.

# Fig.14. STARTER MOTOR



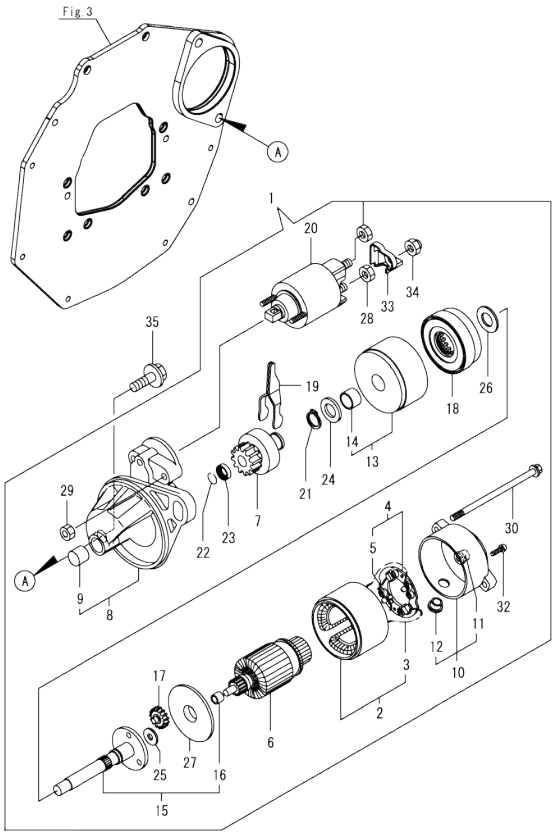


(A)=3TNM72-AFF
(B)=
(C)=
(D)=
(E)=
(F)=

| No. | Lev. | Parts No. | Description | Q'ty (A) | (B) | (C) | (D) | (E) | (F) | I | R |
|---|---|---|---|---|---|---|---|---|---|---|---|
| 1 | 1 | 119515-77010 | STARTER, P1.0 | 1 | | | | | | | |
| 2 | 2 | X0281007680 | YOKE ASSY | 1 | | | | | | | |
| 3 | 3 | X0280996180 | STARTER KIT | 2 | | | | | | | |
| 4 | 2 | X0285105190 | HOLDER ASSY | 1 | | | | | | | |
| 5 | 3 | X0285205030 | SPRING | 4 | | | | | | | |
| 6 | 2 | X0282005871 | ARMATURE ASSY | 1 | | | | | | | |
| 7 | 2 | X0283006960 | CLUTCH | 1 | | | | | | | |
| 8 | 2 | X4284001590 | HOUSING ASSY | 1 | | | | | | | |
| 9 | 3 | X9491050100 | BEARING, NEEDLE | 1 | | | | | | | |
| 10 | 2 | X0285007030 | FRAME ASSY | 1 | | | | | | | |
| 11 | 3 | X9491040990 | BEARING | 1 | | | | | | | |
| 12 | 3 | X0280626010 | COVER | 1 | | | | | | | |
| 13 | 2 | X0284105040 | BEARING ASSY, SUB | 1 | | | | | | | |
| 14 | 3 | X9491034330 | BEARING | 1 | | | | | | | |
| 15 | 2 | X0286105010 | SHAFT ASSY, SUB | 1 | | | | | | | |
| 16 | 3 | X9491034320 | BEARING | 1 | | | | | | | |
| 17 | 2 | X0286305010 | GEAR | 3 | | | | | | | |
| 18 | 2 | X0286355010 | GEAR | 1 | | | | | | | |
| 19 | 2 | X0287405140 | LEVER | 1 | | | | | | | |
| 20 | 2 | X2534000090 | SWITCH ASSY | 1 | | | | | | | |
| 21 | 2 | X9055715000 | RING | 1 | | | | | | | |
| 22 | 2 | X9490721360 | RING | 1 | | | | | | | |
| 23 | 2 | X0280210331 | NUT | 1 | | | | | | | |
| 24 | 2 | X9490138110 | WASHER | 1 | | | | | | | |
| 25 | 2 | X9490138090 | WASHER | 1 | | | | | | | |
| 26 | 2 | X9490138100 | WASHER | 1 | | | | | | | |
| 27 | 2 | X0284525010 | PLATE | 1 | | | | | | | |
| 28 | 2 | X9490562360 | NUT | 1 | | | | | | | |
| 29 | 2 | X9490560750 | NUT | 2 | | | | | | | |
| 30 | 2 | X9490423520 | BOLT, THROUGH | 2 | | | | | | | |
| 32 | 2 | X9490065670 | SCREW, M4X6 | 2 | | | | | | | |
| 33 | 2 | X1280330020 | COVER, TERMINAL | 1 | | | | | | | |
| 34 | 2 | X1289510130 | NUT | 1 | | | | | | | |
| 35 | 1 | 26106-100302 | BOLT, M10X 30 PLATED | 2 | | | | | | | |

N:Old ←Yes/No→ New. Q:Old ←No/Yes→ New. R:Old ←Yes/Yes→ New. S:Old ←No/No→ New. W:Add. Z:Discontinued. F:Interchangeable by set. K:Q'ty Change

Copyright (C) 2018 YANMAR GLOBAL CS CO., LTD. All RightsReserved.

# Fig.15. GENERATOR



(A)=3TNM72-AFF
(B)=
(C)=
(D)=
(E)=
(F)=

| No. | Lev. | Parts No. | Description | Q'ty (A) | (B) | (C) | (D) | (E) | (F) | I | R |
|---|---|---|---|---|---|---|---|---|---|---|---|
| 1 | 1 | 129052-77240 | ALTERNATOR, 12V-55A | 1 | | | | | | | |
| 1-1 | 1 | 129961-77220 | ALTERNATOR, 12V-55A | 1 | | | | | | N | |
| | (A=EZ33892) | | | | | | | | | | |
| 2 | 2 | X9490561001 | NUT | 1 | | | | | | | |
| 3 | 2 | 129052-77380 | ROTOR ASSY | 1 | | | | | | | |
| 4 | 3 | 123501-79240 | BEARING, BALL | 1 | | | | | | | |
| 5 | 3 | 119620-79250 | COVER, BEARING | 1 | | | | | | | |
| 6 | 2 | 129052-77422 | FRAME ASSY | 1 | | | | | | | |
| 6-1 | 2 | 129961-77421 | FRAME ASSY | 1 | | | | | | N | |
| | (A=EZ33892) | | | | | | | | | | |
| 7 | 3 | 119620-79200 | BEARING, BALL | 1 | | | | | | Z | |
| | (A=EZ33892) | | | | | | | | | | |
| 8 | 3 | 119620-79210 | PLATE, RETAINER | 1 | | | | | | Z | |
| | (A=EZ33892) | | | | | | | | | | |
| 9 | 3 | 119620-79220 | SCREW | 4 | | | | | | Z | |
| | (A=EZ33892) | | | | | | | | | | |
| 10 | 3 | 119620-79230 | STUD | 2 | | | | | | Z | |
| | (A=EZ33892) | | | | | | | | | | |
| 11 | 2 | 128401-77440 | COVER, END | 1 | | | | | | | |
| 12 | 2 | 128401-77450 | COVER, GENERATOR | 1 | | | | | | | |
| 13 | 2 | 119620-77461 | PULLEY, GENERATOR | 1 | | | | | | | |
| 14 | 2 | 119620-77471 | NUT | 1 | | | | | | | |
| 15 | 2 | 119620-77490 | COLLAR | 1 | | | | | | | |
| 16 | 2 | 119620-77720 | REGULATOR ASSY | 1 | | | | | | | |
| 17 | 2 | 129052-79260 | HOLDER ASSY | 1 | | | | | | | |
| 18 | 2 | 129052-79270 | HOLDER ASSY, BRUSH | 1 | | | | | | | |
| 19 | 2 | 119620-79290 | SCREW | 6 | | | | | | | |
| 20 | 2 | 119620-79300 | SCREW | 1 | | | | | | | |
| 21 | 2 | 119620-79310 | BOLT | 3 | | | | | | | |
| 22 | 2 | 119620-79320 | SCREW, W/WASHER | 2 | | | | | | | |
| 23 | 2 | 119620-79330 | BOLT | 2 | | | | | | | |
| 24 | 2 | 119620-79340 | BUSH, INSULATION | 1 | | | | | | | |
| 25 | 2 | 119620-79350 | NUT | 2 | | | | | | | |
| 26 | 1 | 26106-100402 | BOLT, M10X 40 PLATED | 1 | | | | | | | |
| 27 | 1 | 119125-77330 | ADJUSTER, BELT | 1 | | | | | | | |
| 28 | 1 | 124732-77340 | SPACER, ADJUSTER | 1 | | | | | | | |
| 29 | 1 | 129972-77341 | BOLT, ADJUSTER L=50 | 1 | | | | | | | |
| 30 | 1 | 26106-080202 | BOLT, M8X 20 PLATED | 1 | | | | | | | |

N:Old ←Yes/No→ New. Q:Old ←No/Yes→ New. R:Old ←Yes/Yes→ New. S:Old ←No/No→ New. W:Add. Z:Discontinued. F:Interchangeable by set. K:Q'ty Change

Copyright (C) 2018 YANMAR GLOBAL CS CO., LTD. All RightsReserved.

# Fig.16. ACCESSORY

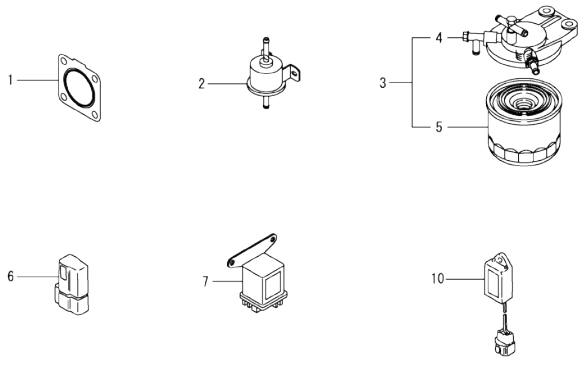




(A)=3TNM72-AFF
(B)=
(C)=
(D)=
(E)=
(F)=

| No. | Lev. | Parts No. | Description | Q'ty (A) | (B) | (C) | (D) | (E) | (F) | I | R |
|---|---|---|---|---|---|---|---|---|---|---|---|
| 1 | 1 | 119515-13200 | GASKET, SILENCER | 1 | | | | | | | |
| 2 | 1 | 119225-52102 | PUMP, FUEL FEED | 1 | | | | | | | |
| 3 | 1 | 129940-55601 | FILTER ASSY, FUEL | 1 | | | | | | | |
| 3-1 | 1 | 129536-55620 | FILTER ASSY, FUEL | 1 | | | | | | N | |
| | (A=EZ33892) | | | | | | | | | | |
| 4 | 2 | 129004-55612 | BRACKET, FILTER | 1 | | | | | | | |
| 4-1 | 2 | 119934-55611 | BRACKET, FILTER | 1 | | | | | | N | |
| | (A=EZ33892) | | | | | | | | | | |
| 5 | 2 | 119802-55801 | FILTER, FUEL | 1 | | | | | | | |
| 6 | 1 | 119643-66900 | DIODE | 1 | | | | | | | |
| 7 | 1 | 119650-77911 | RELAY ASSY, GLOW | 1 | | | | | | | |
| 10 | 1 | 129211-77920 | TIMER, SECTION 1 | 1 | | | | | | | |
| 11 | 1 | 129335-55701 | SEPARATOR ASSY,WATER | 1 | | | | | | W | |
| | (A=Z41448) | | | | | | | | | | |
| 12 | 2 | 104200-55321 | VALVE, TAPER | 1 | | | | | | | |
| 13 | 2 | 104200-55330 | SPRING, FUEL VALVE | 1 | | | | | | | |
| 14 | 2 | 104200-55341 | HANDLE, COCK | 1 | | | | | | | |
| 15 | 2 | 124064-55510 | CUP, FUEL STARINER | 1 | | | | | | | |
| 16 | 2 | 102103-55520 | O-RING, FILTER | 1 | | | | | | | |
| 17 | 2 | 110250-55610 | RING, CUP RETAINING | 1 | | | | | | | |
| 18 | 2 | 121257-55720 | SPRING, ELEMENT | 1 | | | | | | | |
| 19 | 2 | 121257-55731 | FLOAT | 1 | | | | | | | |
| 21 | 2 | 101720-55750 | PLUG, HEXAGON M6 | 2 | | | | | | | |
| 22 | 2 | 104200-55750 | SCREW, M4 | 1 | | | | | | | |
| 23 | 2 | 171081-55910 | FILTER, FUEL 100M | 1 | | | | | | | |
| 24 | 2 | 23418-060000 | GASKET, 6X1.0 | 2 | | | | | | | |
| 25 | 2 | 24311-240100 | O-RING, 1AP10A | 1 | | | | | | | |

N:Old ←Yes/No→ New. Q:Old ←No/Yes→ New. R:Old ←Yes/Yes→ New. S:Old ←No/No→ New. W:Add. Z:Discontinued. F:Interchangeable by set. K:Q'ty Change

Copyright (C) 2018 YANMAR GLOBAL CS CO., LTD. All RightsReserved.

# Parts No. Index

| Parts No. | Fig. No. | Ref. No. |
|---|---|---|
| 101304-59020 | 13 | 2 |
| 101720-55750 | 16 | 21 |
| 102103-55520 | 16 | 16 |
| 103854-39140 | 13 | 1 |
| 104200-55321 | 16 | 12 |
| 104200-55330 | 16 | 13 |
| 104200-55341 | 16 | 14 |
| 104200-55750 | 16 | 22 |
| 105010-11490 | 4 | 3 |
| 105425-01690 | 3 | 5 |
| 106760-01770 | 2 | 6 |
| 110250-55610 | 16 | 17 |
| 114250-39450 | 8 | 16 |
| 119000-59550 | 12 | 33 |
| 119025-01332 | 1 | 31 |
| 119025-01500 | 2 | 1 |
| 119025-01770 | 3 | 4 |
| 119025-14580 | 6 | 3 |
| 119025-21700 | 7 | 1 |
| 119025-22900 | 7 | 33 |
| 119025-25100 | 6 | 9 |
| 119025-35080 | 8 | 11 |
| 119025-42000 | 9 | 1 |
| 119025-42020 | 9 | 3 |
| 119025-42030 | 9 | 4 |
| 119025-59810 | 12 | 20 |
| 119025-59820 | 12 | 21 |
| 119025-59830 | 12 | 22 |
| 119027-01560 | 1 | 1 |
| 119027-34820 | 8 | 3 |
| 119027-34850 | 8 | 5 |
| 119125-01750 | 2 | 2 |
| 119125-01780 | 3 | 8 |
| 119125-01790 | 1 | 32 |
| 119125-01800 | 1 | 33 |
| 119125-01960 | 1 | 7 |
| 119125-01970 | 1 | 5 |
| 119125-02061 | 1 | 9 |
| 119125-02900 | 1 | 36 |
| 119125-02910 | 1 | 39 |
| 119125-02930 | 1 | 23 |
| 119125-02940 | 1 | 42 |
| 119125-21200 | 7 | 4 |
| 119125-21660 | 7 | 11 |
| 119125-25050 | 1 | 26 |
| 119125-25910 | 6 | 14 |
| 119125-25930 | 6 | 13 |
| 119125-32000 | 8 | 1 |
| 119125-34900 | 8 | 4 |
| 119125-39200 | 8 | 13 |

| Parts No. | Fig. No. | Ref. No. |
|---|---|---|
| 119125-39220 | 8 | 14 |
| 119125-51700 | 10 | 82 |
| 119125-51800 | 1 | 35 |
| 119125-59560 | 12 | 29 |
| 119125-59570 | 12 | 31 |
| 119125-77330 | 15 | 27 |
| 119125-77800 | 4 | 55 |
| 119125-77820 | 4 | 56 |
| 119127-21550 | 7 | 8 |
| 119127-42310 | 9 | 17 |
| 119131-18320 | 5 | 5 |
| 119209-35030 | 8 | 10 |
| 119225-52102 | 16 | 2 |
| 119226-07900 | 4 | 53 |
| 119258-44740 | 9 | 18 |
| 119285-11990 | 4 | 11 |
| 119305-35151 | 8 | 17 |
| 119515-01200 | 1 | 30 |
| 119515-11101 | 4 | 13 |
| 119515-11110 | 4 | 14 |
| 119515-11200 | 4 | 20 |
| 119515-11240 | 4 | 21 |
| 119515-11280 | 4 | 25 |
| 119515-11310 | 4 | 44 |
| 119515-11320 | 4 | 45 |
| 119515-11330 | 4 | 46 |
| 119515-11380 | 4 | 34 |
| 119515-11800 | 4 | 57 |
| 119515-13200 | 16 | 1 |
| 119515-14400 | 6 | 2 |
| 119515-22300 | 7 | 22 |
| 119515-23001 | 7 | 24 |
| 119515-23601 | 7 | 28 |
| 119515-23611 | 7 | 31 |
| 119515-42020 | 9 | 12 |
| 119515-53001 | 12 | 1 |
| 119515-53010 | 12 | 3 |
| 119515-59540 | 12 | 23 |
| 119515-61440 | 11 | 22 |
| 119515-77010 | 14 | 1 |
| 119517-11740 | 4 | 4 |
| 119517-22090 | 7 | 16 |
| 119517-22500 | 7 | 18 |
| 119600-11460 | 4 | 2 |
| 119609-22950 | 7 | 35 |
| 119620-01620 | 1 | 13 |
| 119620-02450 | 6 | 4 |
| 119620-14200 | 6 | 1 |
| 119620-21500 | 7 | 7 |
| 119620-59700 | 12 | 35 |

| Parts No. | Fig. No. | Ref. No. |
|---|---|---|
| 119620-77461 | 15 | 13 |
| 119620-77471 | 15 | 14 |
| 119620-77490 | 15 | 15 |
| 119620-77720 | 15 | 16 |
| 119620-79200 | 15 | 7 |
| 119620-79210 | 15 | 8 |
| 119620-79220 | 15 | 9 |
| 119620-79230 | 15 | 10 |
| 119620-79250 | 15 | 5 |
| 119620-79290 | 15 | 19 |
| 119620-79300 | 15 | 20 |
| 119620-79310 | 15 | 21 |
| 119620-79320 | 15 | 22 |
| 119620-79330 | 15 | 23 |
| 119620-79340 | 15 | 24 |
| 119620-79350 | 15 | 25 |
| 119621-21681 | 7 | 12 |
| 119643-66900 | 16 | 6 |
| 119650-77911 | 16 | 7 |
| 119685-42281 | 9 | 8 |
| 119717-01800 | 2 | 3 |
| 119717-03031 | 4 | 35 |
| 119717-03070 | 4 | 36 |
| | | 37 |
| 119717-11131 | 4 | 15 |
| 119717-11190 | 4 | 17 |
| 119717-11260 | 4 | 24 |
| 119717-11340 | 4 | 18 |
| 119717-11350 | 4 | 19 |
| 119717-11650 | 4 | 26 |
| 119717-13110 | 5 | 2 |
| 119717-13600 | 5 | 3 |
| 119717-23200 | 7 | 27 |
| 119717-23911 | 7 | 30 |
| 119717-35140 | 8 | 8 |
| 119717-49800 | 9 | 22 |
| 119717-51150 | 6 | 15 |
| 119717-51420 | 10 | 27 |
| 119717-51711 | 10 | 83 |
| 119717-51750 | 10 | 84 |
| 119717-51761 | 10 | 85 |
| 119717-51860 | 10 | 97 |
| 119717-51930 | 11 | 2 |
| 119717-61050 | 11 | 3 |
| 119717-61060 | 11 | 86 |
| 119717-61070 | 11 | 4 |
| 119718-13100 | 5 | 1 |
| 119734-02220 | 1 | 34 |
| 119740-42350 | 9 | 16 |
| 119740-61470 | 11 | 73 |

| Parts No. | Fig. No. | Ref. No. |
|---|---|---|
| 119802-03100 | 4 | 38 |
| 119802-03110 | 4 | 39 |
| 119802-03121 | 4 | 40 |
| 119802-03131 | 4 | 41 |
| 119802-03141 | 4 | 42 |
| 119802-55801 | 16 | 5 |
| 119840-59570 | 12 | 34 |
| 119934-55611 | 16 | 4 -1 |
| 119C10-21931 | 7 | 13 |
| 119C10-21940 | 7 | 14 |
| 119D00-01660 | 3 | 2 |
| 121250-44901 | 9 | 26 |
| 121257-55720 | 16 | 18 |
| 121257-55731 | 16 | 19 |
| 121267-44760 | 9 | 19 |
| 121450-42450 | 9 | 25 |
| 122710-51090 | 10 | 8 |
| 123501-79240 | 15 | 4 |
| 124060-01050 | 1 | 4 |
| 124060-21600 | 7 | 10 |
| 124064-55510 | 16 | 15 |
| 124066-59100 | 12 | 32 |
| 124160-01751 | 4 | 33 |
| 124465-44950 | 9 | 27 |
| | | 28 |
| 124732-77340 | 15 | 28 |
| 128401-77440 | 15 | 11 |
| 128401-77450 | 15 | 12 |
| 129004-55612 | 16 | 4 |
| 129052-77240 | 15 | 1 |
| 129052-77380 | 15 | 3 |
| 129052-77422 | 15 | 6 |
| 129052-79260 | 15 | 17 |
| 129052-79270 | 15 | 18 |
| 129100-01580 | 3 | 1 |
| | 7 | 2 |
| 129100-52200 | 10 | 101 |
| 129150-11230 | 4 | 27 |
| 129150-11750 | 4 | 29 |
| 129150-25301 | 6 | 12 |
| 129150-59120 | 12 | 15 |
| 129150-59131 | 12 | 18 |
| 129155-51020 | 10 | 5 |
| 129155-51280 | 10 | 18 |
| 129155-51400 | 10 | 25 |
| 129155-51580 | 10 | 46 |
| 129155-52051 | 10 | 100 |
| 129155-61461 | 11 | 72 |
| 129211-77920 | 16 | 10 |
| 129335-55701 | 16 | 11 |

# Parts No. Index

| Parts No. | Fig. No. | Ref. No. |
|---|---|---|
| 129350-49530 | 9 | 21 |
| 129508-11180 | 4 | 16 |
| 129536-55620 | 16 | 3 -1 |
| 129630-77900 | 11 | 118 |
| 129900-32040 | 1 | 27 |
| 129901-11450 | 4 | 1 |
| 129901-53800 | 12 | 4 |
| 129901-59560 | 12 | 30 |
| 129940-55601 | 16 | 3 |
| 129961-77220 | 15 | 1 -1 |
| 129961-77421 | 15 | 6 -1 |
| 129972-77341 | 15 | 29 |
| 129E00-13610 | 5 | 4 |
| 158552-61900 | 11 | 74 |
| 158600-51410 | 10 | 26 |
| 158600-51420 | 10 | 28 |
| 158600-51570 | 10 | 45 |
| 158600-51790 | 10 | 86 |
| 171056-49120 | 9 | 24 |
| 171081-55910 | 16 | 23 |
| 22190-100002 | 11 | 78 |
| 22190-120002 | 12 | 36 |
| | 13 | 3 |
| 22190-160002 | 3 | 7 |
| | 10 | 88 |
| 22217-120000 | 10 | 89 |
| 22242-000120 | 4 | 30 |
| 22252-000220 | 7 | 23 |
| 22351-050010 | 10 | 90 |
| 22351-060012 | 1 | 28 |
| 22372-040000 | 11 | 80 |
| 22512-040120 | 7 | 5 |
| 22512-050120 | 7 | 15 |
| 22857-500100 | 4 | 47 |
| | | 48 |
| 22857-500160 | 4 | 49 |
| 23414-080000 | 9 | 13 |
| 23418-060000 | 16 | 24 |
| 23876-005000 | 1 | 10 |
| | 4 | 12 |
| 24311-000180 | 2 | 7 |
| 24311-000320 | 4 | 50 |
| 24311-240100 | 16 | 25 |
| 24316-000090 | 8 | 6 |
| 26022-050122 | 10 | 94 |
| 26106-060102 | 8 | 12 |
| | 11 | 82 |
| 26106-060122 | 6 | 8 |
| | 8 | 15 |
| 26106-060142 | 8 | 2 |

| Parts No. | Fig. No. | Ref. No. |
|---|---|---|
| 26106-060142 | 11 | 83 |
| 26106-060202 | 4 | 51 |
| | 11 | 84 |
| 26106-060302 | 9 | 20 |
| 26106-060402 | 1 | 29 |
| 26106-060452 | 11 | 85 |
| 26106-060752 | 4 | 52 |
| 26106-080122 | 8 | 7 |
| | 9 | 14 |
| 26106-080162 | 4 | 54 |
| 26106-080202 | 9 | 23 |
| | 15 | 30 |
| 26106-080352 | 2 | 4 |
| 26106-080402 | 4 | 32 |
| 26106-080452 | 2 | 5 |
| | 9 | 15 |
| 26106-100302 | 14 | 35 |
| 26106-100402 | 15 | 26 |
| 26206-100202 | 3 | 3 |
| 26306-080002 | 5 | 6 |
| 26366-080002 | 11 | 61 |
| 26577-060122 | 9 | 10 |
| 26716-120002 | 10 | 96 |
| 26979-050162 | 4 | 31 |
| 27241-300000 | 1 | 11 |
| 27241-450000 | 1 | 12 |
| 719027-51380 | 10 | 1 |
| X0280210331 | 14 | 23 |
| X0280626010 | 14 | 12 |
| X0280996180 | 14 | 3 |
| X0281007680 | 14 | 2 |
| X0282005871 | 14 | 6 |
| X0283006960 | 14 | 7 |
| X0284105040 | 14 | 13 |
| X0284525010 | 14 | 27 |
| X0285007030 | 14 | 10 |
| X0285105190 | 14 | 4 |
| X0285205030 | 14 | 5 |
| X0286105010 | 14 | 15 |
| X0286305010 | 14 | 17 |
| X0286355010 | 14 | 18 |
| X0287405140 | 14 | 19 |
| X1280330020 | 14 | 33 |
| X1289510130 | 14 | 34 |
| X2534000090 | 14 | 20 |
| X4284001590 | 14 | 8 |
| X9055715000 | 14 | 21 |
| X9490065670 | 14 | 32 |
| X9490138090 | 14 | 25 |
| X9490138100 | 14 | 26 |

| Parts No. | Fig. No. | Ref. No. |
|---|---|---|
| X9490138110 | 14 | 24 |
| X9490423520 | 14 | 30 |
| X9490560750 | 14 | 29 |
| X9490561001 | 15 | 2 |
| X9490562360 | 14 | 28 |
| X9490721360 | 14 | 22 |
| X9491034320 | 14 | 16 |
| X9491034330 | 14 | 14 |
| X9491040990 | 14 | 11 |
| X9491050100 | 14 | 9 |

| Parts No. | Fig. No. | Ref. No. |
|---|---|---|